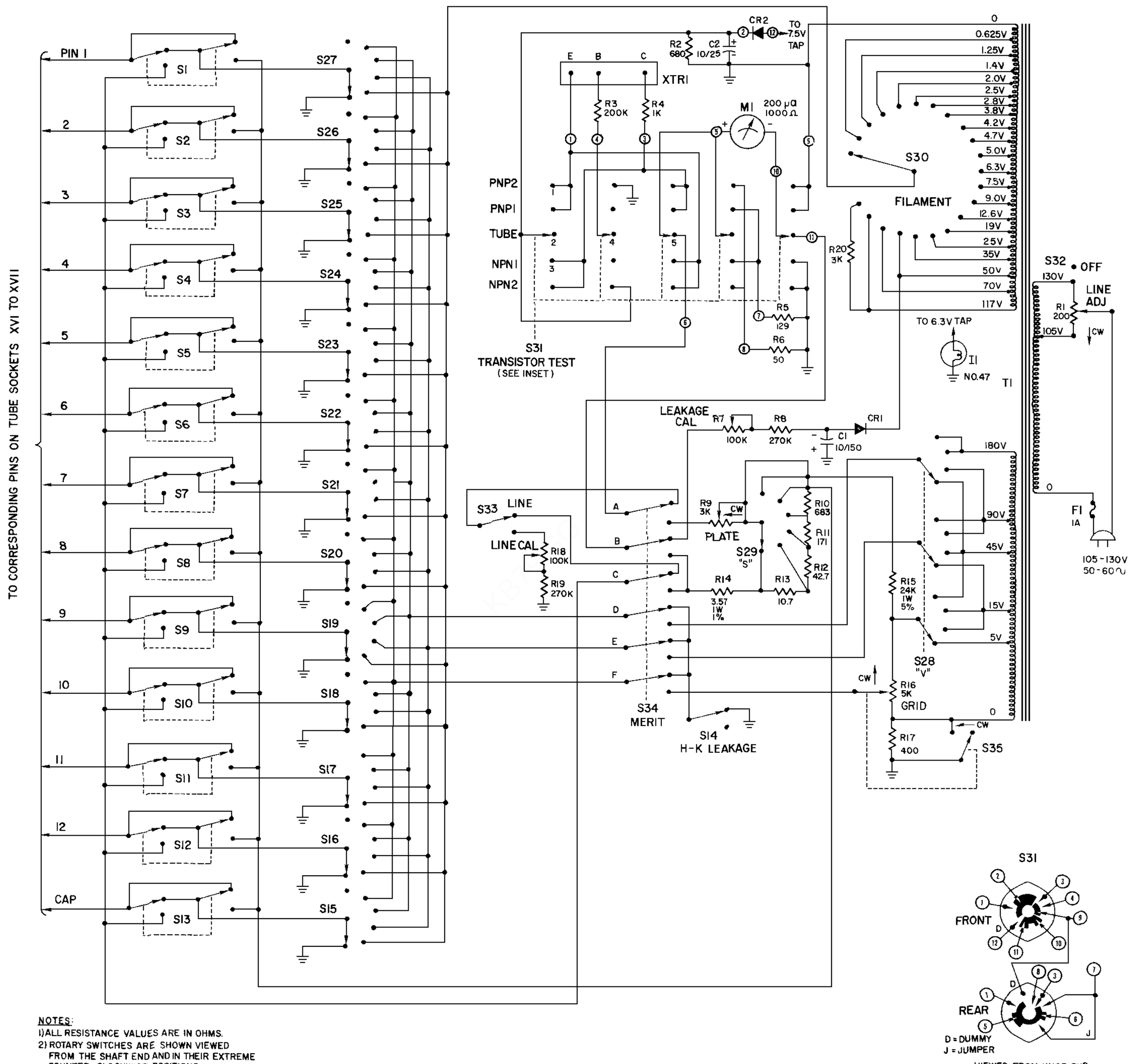

NOTES:
1) ALL RESISTANCE VALUES ARE IN OHMS.
2) ROTARY SWITCHES ARE SHOWN VIEWED FROM THE SHAFT END AND IN THEIR EXTREME COUNTER-CLOCKWISE POSITIONS.

SCHEMATIC FOR 667