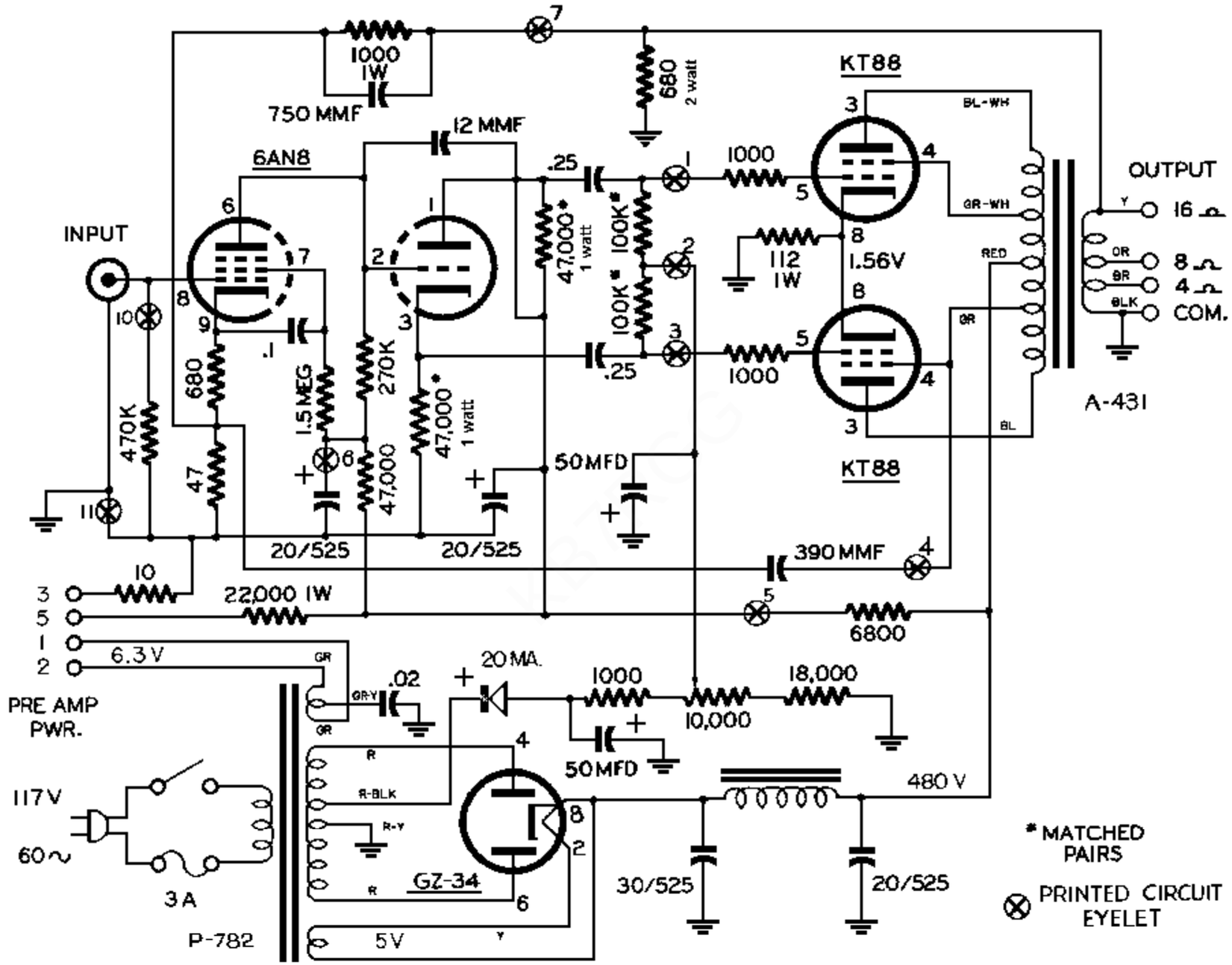

DYNAKIT MARK III 60 WATT POWER AMPLIFIER