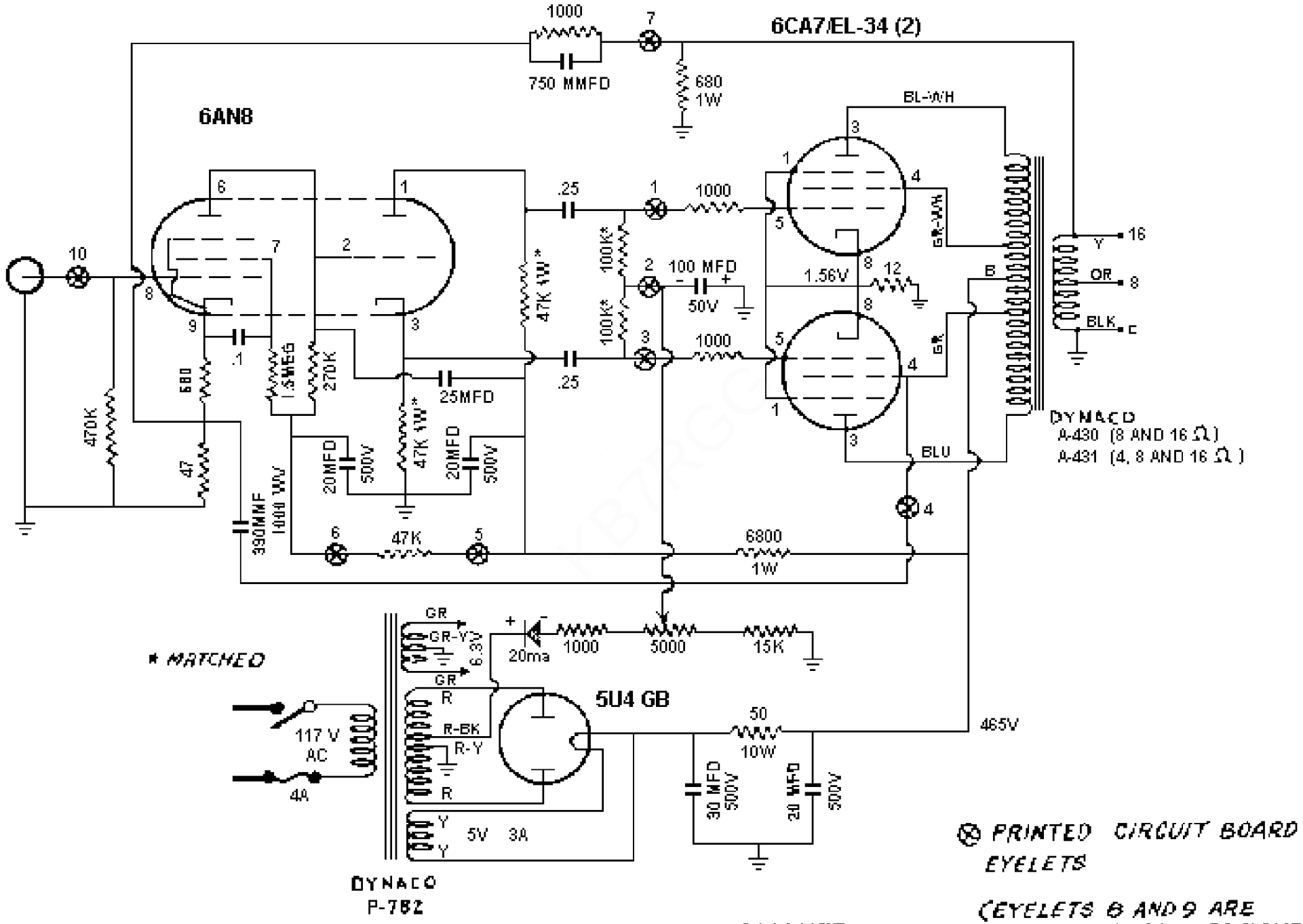

DYNACO CIRCUIT AS USED IN THE DYNAKIT

⊗ PRINTED CIRCUIT BOARD EYELETS

(EYELETS 8 AND 9 ARE FILAMENT CONNECTIONS FOR 6AN8 TUBE)